Laxmi Singh Charitable Trust's (Regd.)
THAKUR COLLEGE OF
ENGINEERING & TECHNOLOGY
Autonomous College Affiliated to University of Mumbai
Approved by All India Council for Technical Education(AICTE) and Government of Maharashtra(GoM)
Conferred Autonomous Status by University Grants Commission (UGC) for 10 years w.e.f. A.Y 2019-20
Amongst Top 200 Colleges in the Country, Ranked 195th in NIRF India Ranking 2019 in Engineering College category
• ISO 9001:2015 Certified • Programmes Accredited by National Board of Accreditation (NBA), New Delhi
• Institute Accredited by National Assessment and Accreditation Council (NAAC), Bengaluru
Estd. in 2001
Website : www.tcetmumbai.in

END SEMESTER EXAMINATION, JUNE 2023

F. E./F.T. SEMESTER II (CBCGS-HME 2020)

Branch	COMP, CIVIL, E&CS, CSE, IOT, AI&DS	Q.P Code	E121G1004-1
Subject	Engineering Mechanics	Duration	2 Hours
Subject Code	ESC104	Max. Marks	60

Instructions:
1. All sections are compulsory
2. Figures to the right indicate full marks.
3. Assume suitable data if necessary and state the assumptions clearly.

Section-I	Short Answer Questions (Answer any 05 questions out of 06) (Fundamental, Core Types)				(10 Marks)
Q. No.		Marks	CO	RBT Level	PI
1	Define centroid with an example	2	CO1	R	2.1.2
2	State conditions of equilibrium for concurrent force system	2	CO2	R	2.1.2
3	Define impending motion	2	CO3	R	2.1.2
4	Find magnitude of force vector P=30i+12j-19k KN 37.41	2	CO4	U	1.3.1
5	State principle of conservation of momentum	2	CO6	R	2.1.2
6	Locate ICR of purely rolling wheel given in fig 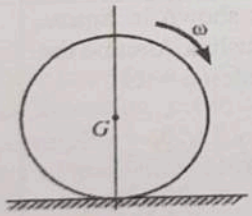	2	CO5	R	1.3.1
Section-II	Descriptive Answer Questions (Answer any 04 out of 06) (Descriptive, Comprehension Types)				(20 Marks)
1	Explain Uniformly Distributed Load and Uniformly Varying Load with suitable diagram.	5	CO2	U	2.1.2
2	The rod is in contact with two smooth stationary surfaces. At the instant shown in figure its end B has velocity 2 m/s rightward. Locate ICR, find velocity of end A and angular velocity of the rod.	5	CO5	A	1.3.1

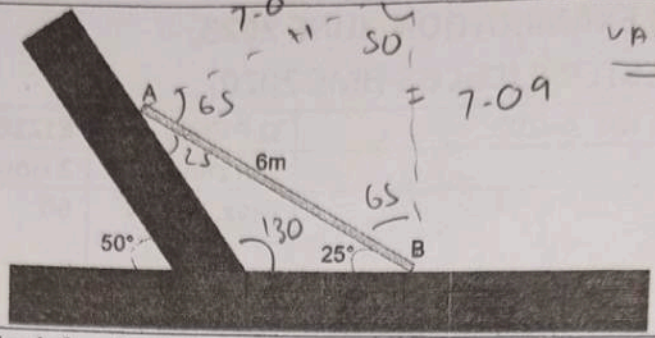

3	Define principle of superposition and principle of transmissibility with suitable diagram.	5	CO1	U	
4	Find the resultant and its direction of four concurrent forces as shown in the figure. 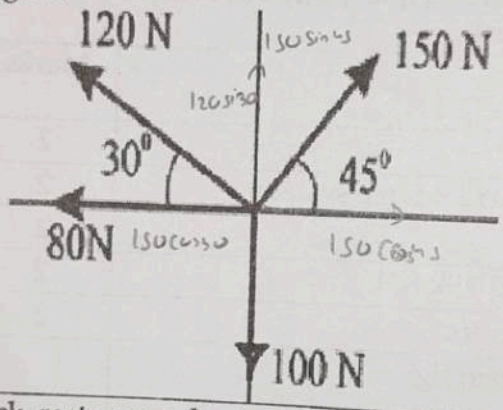 	5	CO1	U	
5	A wooden block rests on a horizontal plane as shown in figure. Determine the force 'P' required to (a) pull it (b) push it. Assume the weight of block as 100 N and the coefficient of friction $\mu = 0.4$ 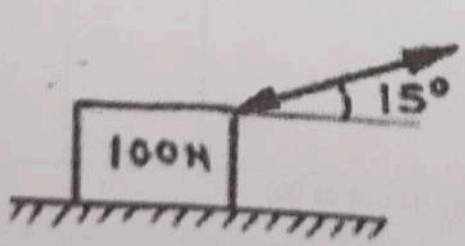 	5	CO3	A	1.3.1
6	Two balls moving in the same straight line collide with each other as shown in figure. Before and after collision both the balls move in same direction. If coefficient of restitution for these balls is 0.2, find velocities of both the balls after collision.	5	CO6	A	1.3.1

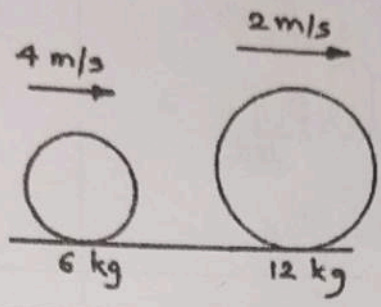

0.8 m/s
0.4 m/s

Section-III	**Long Answer Question (Answer any 03 out of 05) (Application, Analytical, Evaluation, Design Type)**				**(30 Marks)**
1	A 25kg pipe is supported at A by a system of five chords. Determine the force in each chord for equilibrium.	10	CO2	A	1.3.1
2	The lines of action of three forces concurrent at 'A' pass respectively through B, C and D. Knowing coordinates of G (0,0,0), the magnitudes of the forces are, $F_{AB} = 40$ N, $F_{AC} = 30$ N, $F_{AD} = 40$ N. Find the resultant force vector of these three forces.	10	CO5	A	1.3.1
3	Draw FBD and find support reactions at A and B of the given beam.	10	CO2	A	1.3.1

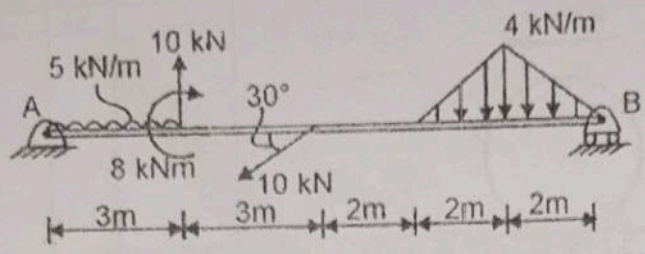

4	Find the centroid of the given shape 1.152, 3.606 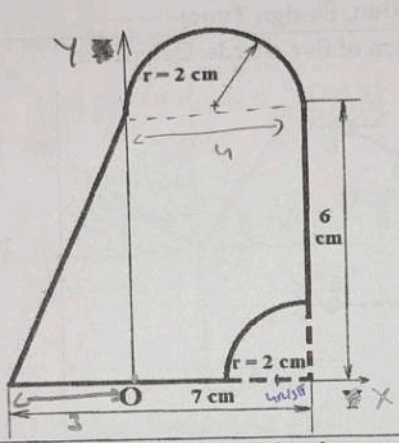 	10	CO1	A	1.3.1
5	A suitcase of weight of weight 40 N slides from rest 6 m down a ramp. If μK = 0.2, determine the horizontal distance 'd' where it will strike the ground at C. How much time does it take to move from A to C? 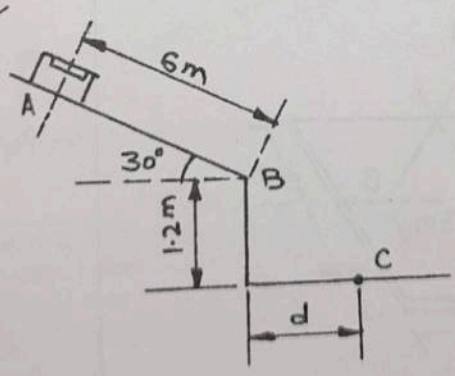 	10	CO5	A	1.3.1