ENGINEERING & TECHNOLOGY
Autonomous College Affiliated to University of Mumbai
Approved by All India Council for Technical Education(AICTE) and Government of Maharashtra(GoM)
Conferred Autonomous Status by University Grants Commission (UGC) for 10 years w.e.f. A.Y 2019-20
Amongst Top 200 Colleges in the Country, Ranked 193rd in NIRF India Ranking 2019 in Engineering College category
• ISO 9001:2015 Certified • Programmes Accredited by National Board of Accreditation (NBA), New Delhi
• Institute Accredited by National Assessment and Accreditation Council (NAAC), Bangalore
std. in 2001

IN-SEMESTER EXAMINATION (ISE-I) DECEMBER, 2022
FE/FT (Semester-I) CBCGS-HME 2020
Engineering Graphics & Design

Branch: COMP, AI&DS,CIVIL,CSE, E&CS, IoT
Date : 28/12/2022
Division: A,B,C
Duration: 90 Minutes

Timing: 10.00AM to 11:30AM
Maximum Marks: 20

Instructions –
1. All questions are compulsory.
2. Assume suitable data wherever necessary and state the assumptions made.
3. Labelling and dimensioning should be given wherever necessary.
4. Use of logarithmic table, drawing instruments and non-programmable calculators is permitted.
5. Proper Line work indicates full marks.

Q.1		Solve any 5 Questions.	Marks
	a.	Draw F.V of following Fig 1.1	02

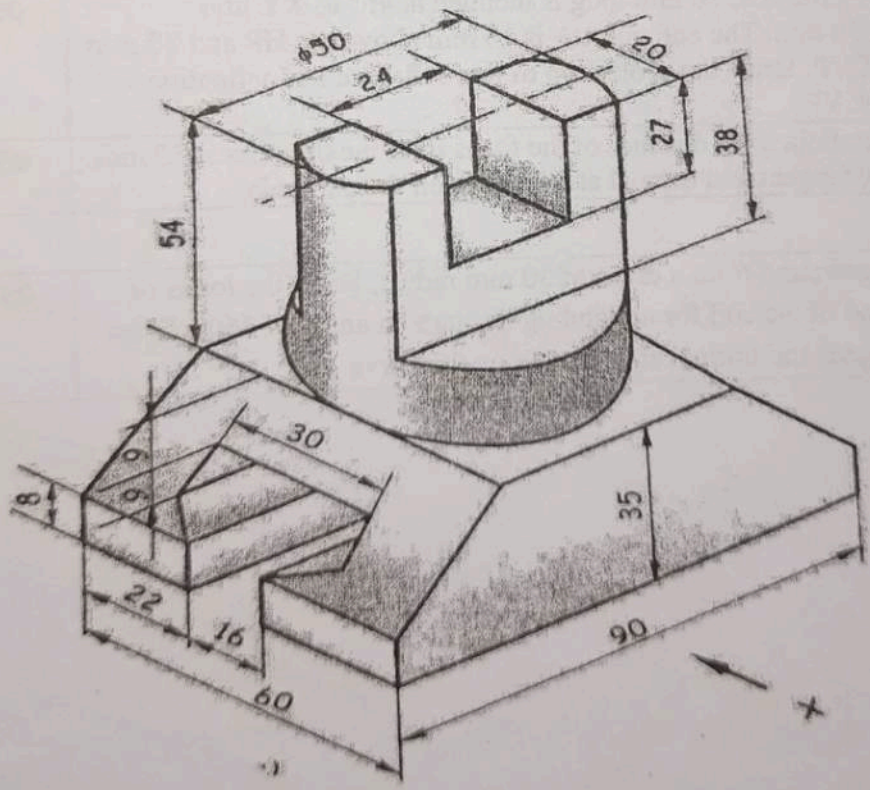

Fig 1.1

	b.	Draw Top View of above fig 1.1	02
	c.	Draw Side View of above fig 1.1	02
	d.	Give dimensions and labelling of above fig 1.1	02
	e.	State and explain any four types of Line.	02
	f.	i) Draw the projection of point if position of a point 'U' on H.P. and 25 mm behind V.P. ii)Draw the projection of point if position of a point 'S' 20 mm above H.P. and 25 mm in front of V.P.	02
	g.	Make a circle of diameter of 30mm and divide into 8 equal parts	02
Q.2.	a.	A line PQ of length 40mm is inclined to both the VP and the HP. The Line is inclined at 30^0 to HP and 45^0 to VP. The Point P is 20 mm above HP and 30 mm in front of VP. Draw its projections. Find PL and EL.	05
		OR	
	b.	The FV of Line AB, 70 mm long is inclined at 45° to XY line measures 50 mm. The end point A is 10 mm above the HP and 20 mm in front of VP. Draw the projection of line AB; find its Inclination with HP & VP.	05
Q.3	a.	Draw a parabola if the distance of the focus from the directrix is 55 mm. Also draw tangent and normal at any point on the parabola	05
		OR	
	b.	A coil is unwound from a drum of 30 mm radius. Draw the locus of the free end of the coil for unwinding through an angle of 360°. Draw also a tangent and normal at any point on the curve	05

IN-SEMESTER EXAMINATION (ISE-II) CBCGS-HME 2020

Engineering Graphics & Design

Branch: COMP,CIVIL,CS&E,E&CS,IoT,AI&DS (Group 1)
Date : 25/01/2023
Division: A,B,C
Duration: 90 Minutes
Timing: 10:00 AM to 11:30 AM
Maximum Marks: 20

Instructions –

1. All questions are compulsory.
2. Assume suitable data wherever necessary and state the assumptions made.
3. Labelling and dimensioning should be given wherever necessary.
4. Use of logarithmic table, drawing instruments and non-programmable calculators is permitted.
5. Proper Line work indicates full marks.

Q.1		**Solve any 5 out of 7 questions (2 marks each).**	Marks
	a.	Draw a regular hexagon of 35 mm side.	02
	b.	Draw Front View and Top View of a Square Pyramid having side of base 30 mm, axis height 65 mm resting on its base on HP.	02
	c.	Draw Front View and Top View of a pentagonal Pyramid having side of base 35 mm, axis height 70 mm resting on its base on HP.	02
	d.	Draw Iso Circle of 55 mm diameter.	02
	e.	Draw Sectional Front View along A-A for following fig. 1.	02

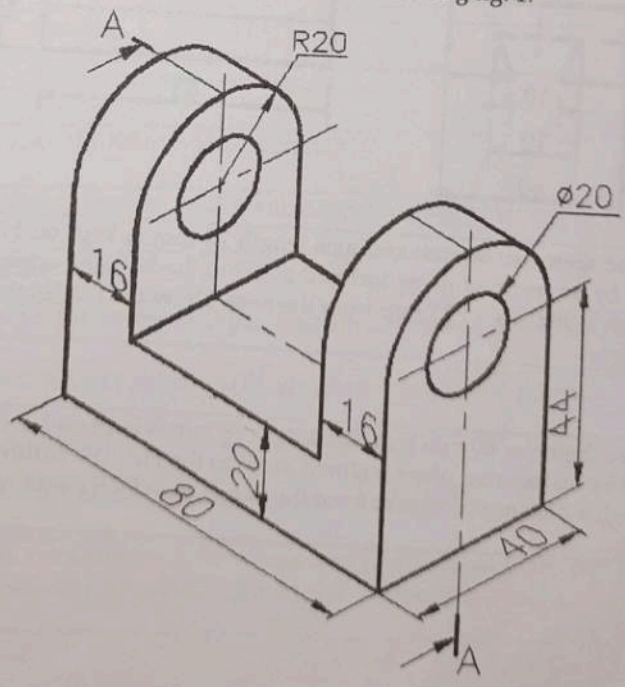

Figure 1

	f.	Draw a Top View for fig. 1.	02
	g.	Give six suitable dimensions in the above fig.1	02
Q.2	a.	A square pyramid side of base 40 mm and axis length 65 mm is resting on one of its corners of base in the HP such that the axis of pyramid is inclined at 45⁰ to the HP and parallel to VP. Draw the projection of square pyramid.	05
		OR	
	b.	Draw Isometric view for the given two views 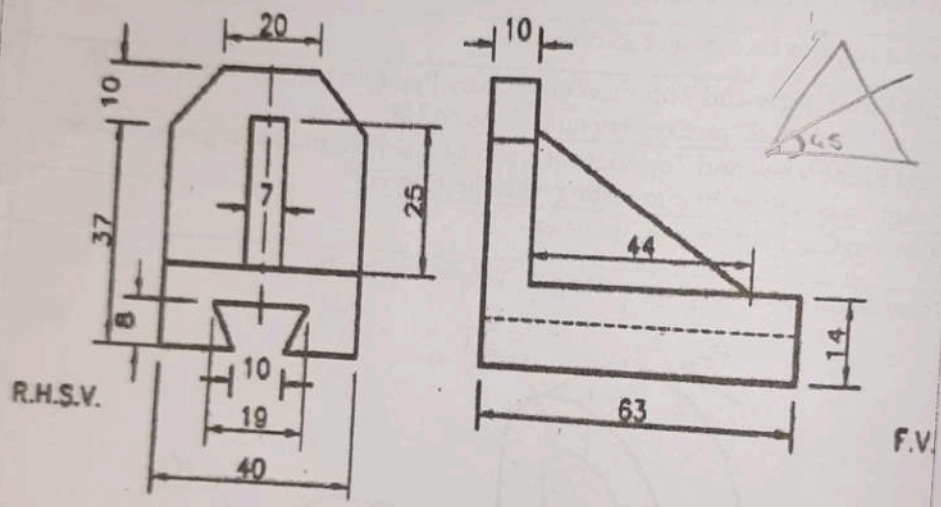	05
Q.3	a.	A cone of base diameter 60 mm and axis length 70 mm is kept on HP on its base. It is cut by an inclined plane inclined at 45⁰ to the HP. The cutting plane passes through a distance of 35 mm from the base. Draw the FV, Sectional Top View of the cone.	05
		OR	
Q3.	b.	A cone of base diameter 60 mm and axis length 70 mm is kept on HP on its base. It is cut by an inclined plane inclined at 45⁰ to the HP. The cutting plane passes through a distance of 35 mm from the base. Draw DLS (sectional TV is not required).	05

Estd. in 2001

Jagdish Singh Charitable Trust's (Regd.)
THAKUR COLLEGE OF ENGINEERING & TECHNOLOGY
Website : www.tcetmumbai.in
Autonomous College Affiliated to University of Mumbai
Approved by All India Council for Technical Education(AICTE) and Government of Maharashtra(GoM)
Conferred Autonomous Status by University Grants Commission (UGC) for 10 years w.e.f. A.Y 2019-20
Amongst Top 200 Colleges in the Country, Ranked 191st in NIRF India Ranking 2019 in Engineering College category
• ISO 9001:2015 Certified • Programmes Accredited by National Board of Accreditation (NBA), New Delhi
• Institute Accredited by National Assessment and Accreditation Council (NAAC), Bangalore

END SEMESTER EXAMINATION, FEBRUARY 2023

F.E./F.T. Semester I (CBCGS-HME 2020)

Branch:	**COMP/ CIVIL / E&CS / CSE/ IoT/ AI&DS**	**Q.P. Code:**	**R1G10041**
Subject:	**Engineering Graphics and Design**	**Duration:**	**3 hours**
Subject Code:	**ESC102**	**Max.Marks:**	**60**

Instructions:
1. **All sections are compulsory**
2. **Figures to the right indicate full marks.**
3. **Assume suitable data if necessary and state the assumptions clearly**

Section-I	**Short Answer Question(Answer any 05 questions out of 06) (Fundamental , Core Types)**				**(10 Marks)**
Q. No.		**Marks**	**CO**	**RBT Level**	**PI**
1	Draw iso-circle of 65 mm diameter.	2	CO6	L3	3.2.1
2	Draw TV of a square pyramid.	2	CO4	L2	3.2.1
3	State any four rules of dimensioning.	2	CO3	L1	1.4.1
4	State and draw any two types of lines.	2	CO1	L1	1.4.1
5	Draw projections of following points 1. X 30mm behind VP and on HP 2. Y 20mm behind VP and on 20 above HP	2	CO2	L2	3.2.1
6	A line of 65 mm length is inclined at 40^0 to V.P. and parallel to HP has one of its ends 15mm in front of VP. Draw TV of the line.	2	CO2	L2	3.2.1
Section-II	**Descriptive Answer Questions (Answer any 04 out of 06) (Descriptive, Comprehension Types)**				**(20 Marks)**
1	Draw involute of a triangle of side 40mm.	5	CO1	L2	3.2.3
2	A cone of 50mm base diameter and 65mm axis height has its base on HP and is being cut by a sectional plane at 45° which bisects the axis of the cone. Draw its FV with section line & TV (sectional TV is not required)	5	CO5	L3	3.2.2
3	A line AB 75mm long is inclined at 30^0 to HP and 45^0 to VP. The end A is 20mm above HP and 25mm in front of VP. Draw its projections.	5	CO2	L3	3.2.2
4	A square pyramid base edge 35mm and axis height 55mm is resting on one of its base corners on HP such that apex is 30mm above HP. Draw its projections.	5	CO4	L3	3.2.2

P.T.O.

5	Trace an ellipse in which the focus directrix distance is 50 mm and eccentricity is 2/3.	5	CO1	L3	3.3
6	Draw F.V. for the following figure along X with 3 proper dimensions 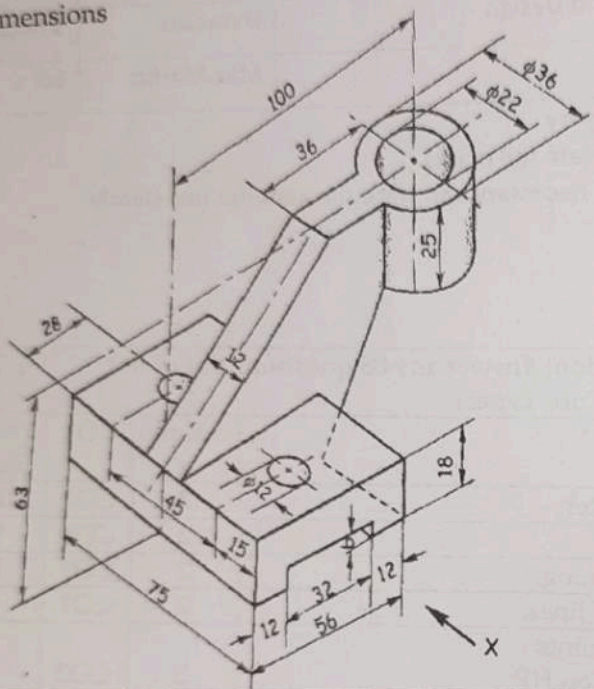	5	CO3	L4	3.3.2

Section-III Long Answer Question (Answer any 03 out of 05) (Application, Analytical, Evaluation, Design Type) **(30 Marks)**

1	Draw Sec. F.V. along A-A and TV for the following figure along with 8 proper dimensions. 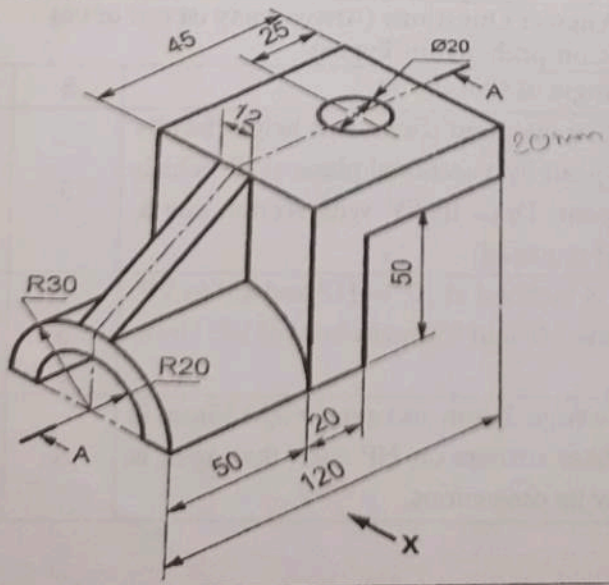	10	CO3	L4	3.3.2

L = 95 mm

2	A line AB, 75 mm long has its end A 15 mm above HP and 30 mm in front of VP. The end B is 45 mm above HP and 70 mm in front of VP. Draw the Projection of line AB and find its inclination with the HP & VP.	10	CO2	L3	3.2.3
3	A pentagonal pyramid has a height of 60mm and the side of base 30mm rests on one of its base edges on HP such that the axis is 30^0 inclined to HP and the TV of the axis is 45^0 inclined to the VP. Draw its projections.	10	CO4	L4	3.3.2
4	Draw the isometric view of the given two views. 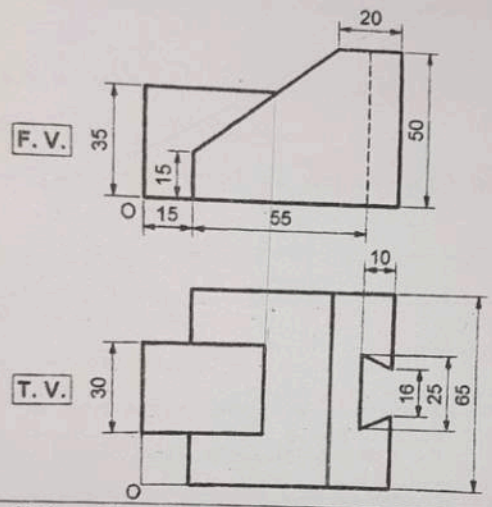	10	CO6	L4	3.4.1
5	A cone of 50mm base diameter and 65mm axis height has its base on HP and is being cut by a sectional plane 40^0 inclined to HP and bisects the axis of the cone. Draw its FV, Sectional TV and True shape of the section.	10	CO5	L4	3.2.2